2SD820

SILICON NPN TRIPLE DIFFUSED MESA TYPE

COLOR TV HORIZONTAL OUTPUT APPLICATIONS.

FEATURES:

- High Voltage : V_{CBO}=1500V
- Low Saturation Voltage
  : $V_{CE(sat)}$=5V (Max.) (I_C=4A, I_B=0.8A)
- High Speed : t_f=1.0μs (Max.)
- Glass Passivated Collector-Base Junction.

Unit in mm

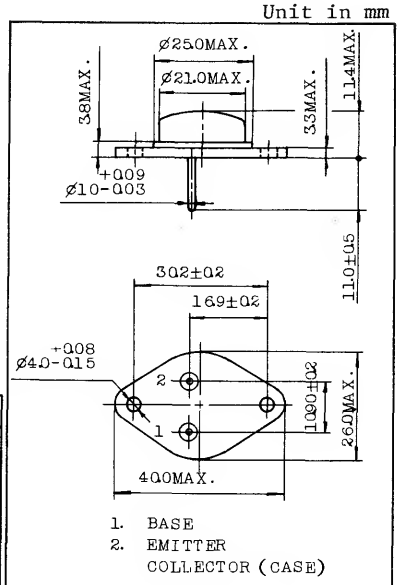

1. BASE
2. EMITTER
COLLECTOR (CASE)

JEDEC	TO-3
EIAJ	TC-3, TB-3
TOSHIBA	2-21B1A

Mounting kit No. AC42C
Weight : 17g

MAXIMUM RATINGS (Ta=25°C)

CHARACTERISTIC	SYMBOL	RATING	UNIT
Collector-Base Voltage	V_{CBO}	1500	V
Collector-Emitter Voltage	V_{CEO}	600	V
Emitter-Base Voltage	V_{EBO}	5	V
Collector Current	I_C	5	A
Emitter Current	I_E	-5	A
Collector Power Dissipation (Tc=25°C)	P_C	50	W
Junction Temperature	T_j	150	°C
Storage Temperature Range	T_{stg}	-65∿150	°C

ELECTRICAL CHARACTERISTICS (Ta=25°C)

CHARACTERISTIC	SYMBOL	TEST CONDITION	MIN.	TYP.	MAX.	UNIT
Collector Cut-off Current	I_{CBO}	V_{CB}=500V, I_E=0	-	-	10	μA
Emitter Cut-off Current	I_{EBO}	V_{EB}=5V, I_C=0	-	-	1	mA
DC Current Gain	h_{FE}	V_{CE}=5V, I_C=1A	8	20	-	
Collector-Emitter Saturation Voltage	$V_{CE(sat)}$	I_C=4A, I_B=0.8A	-	3	5	V
Base-Emitter Saturation Voltage	$V_{BE(sat)}$	I_C=4A, I_B=0.8A	-	-	1.5	V
Transition Frequency	f_T	V_{CE}=10V, I_C=0.1A	-	3	-	MHz
Collector Output Capacitance	C_{ob}	V_{CB}=10V, I_E=0, f=1MHz	-	165	-	pF
Fall Time (Fig.)	t_f	I_{CP}=4A, $I_{B1(end)}$=0.8A	-	0.5	1.0	μs

Fig. t_f TEST CIRCUIT

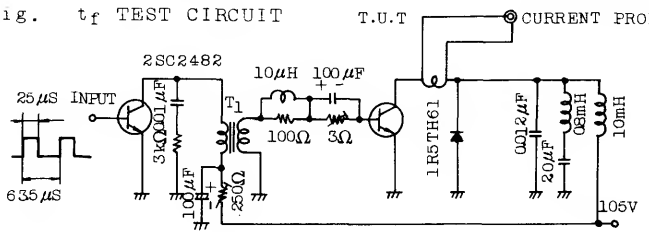

BASE CURRENT

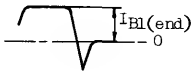
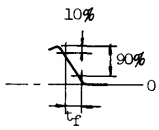
COLLECTOR CURRENT